67"

RIPLEY COLLECTION

FRONT VIEW

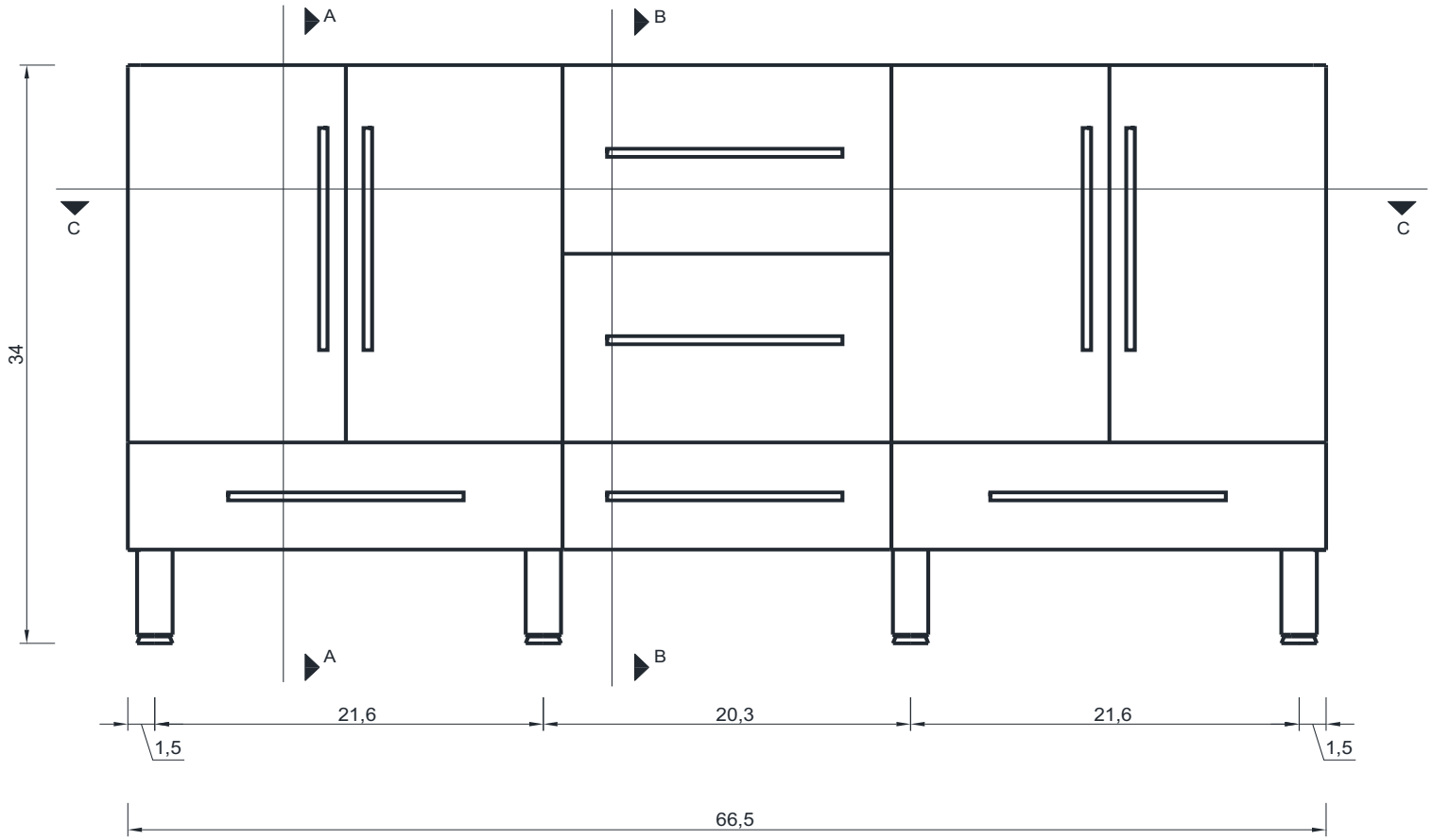

Vanity Only

AT-8063

ALYA Bath

67"

RIPLEY COLLECTION

SIDE VIEW

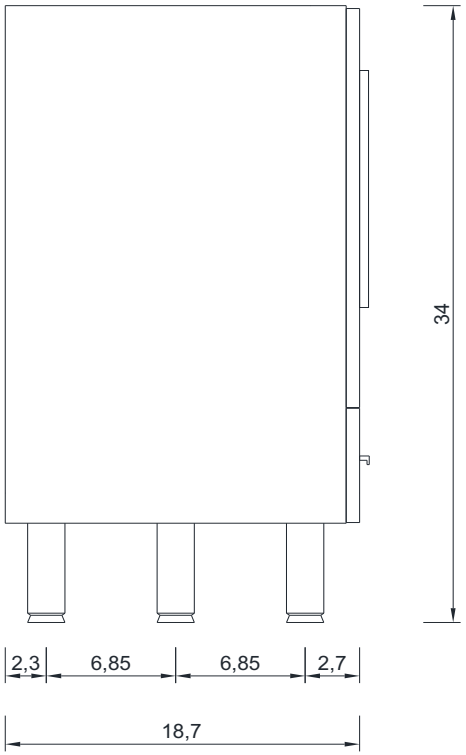

A - A SECTION

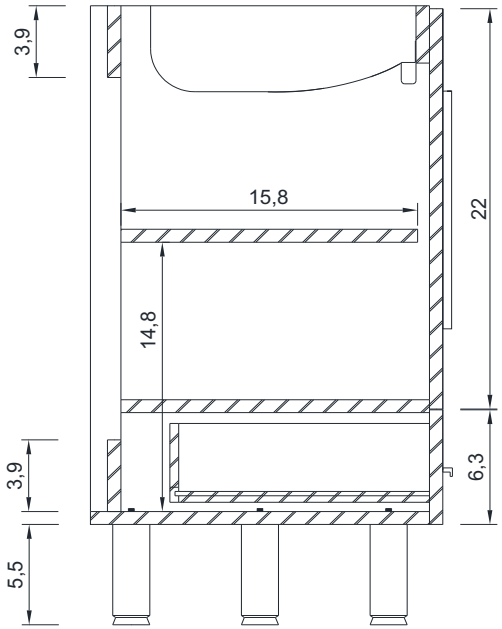

B - B SECTION

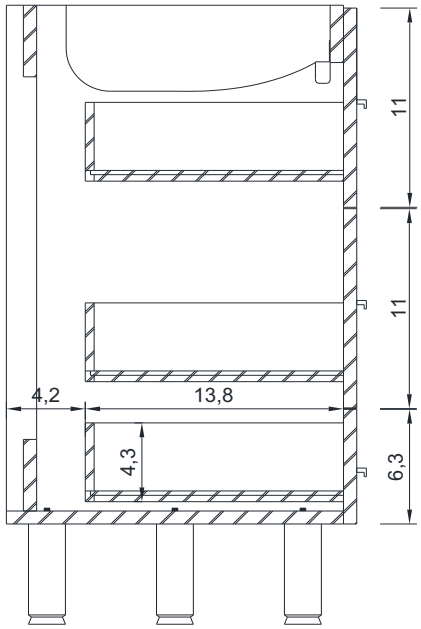

Vanity Only

AT-8063

ALYA Bath

67"

RIPLEY COLLECTION

TOP VIEW

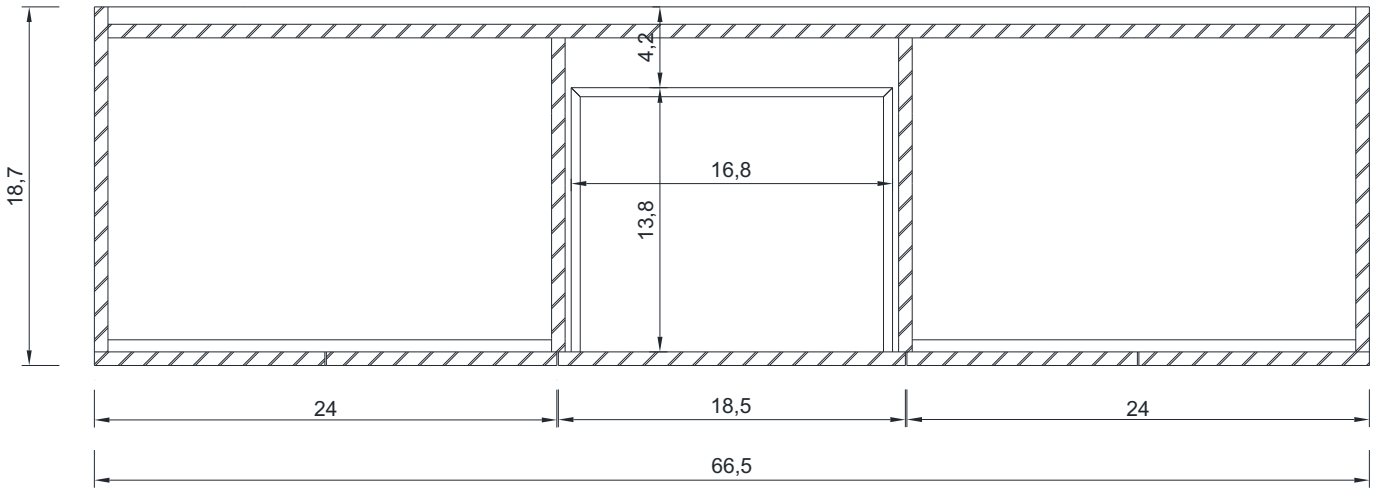

Vanity Only

AT-8063

ALYA Bath

67"

RIPLEY COLLECTION

FRONT VIEW

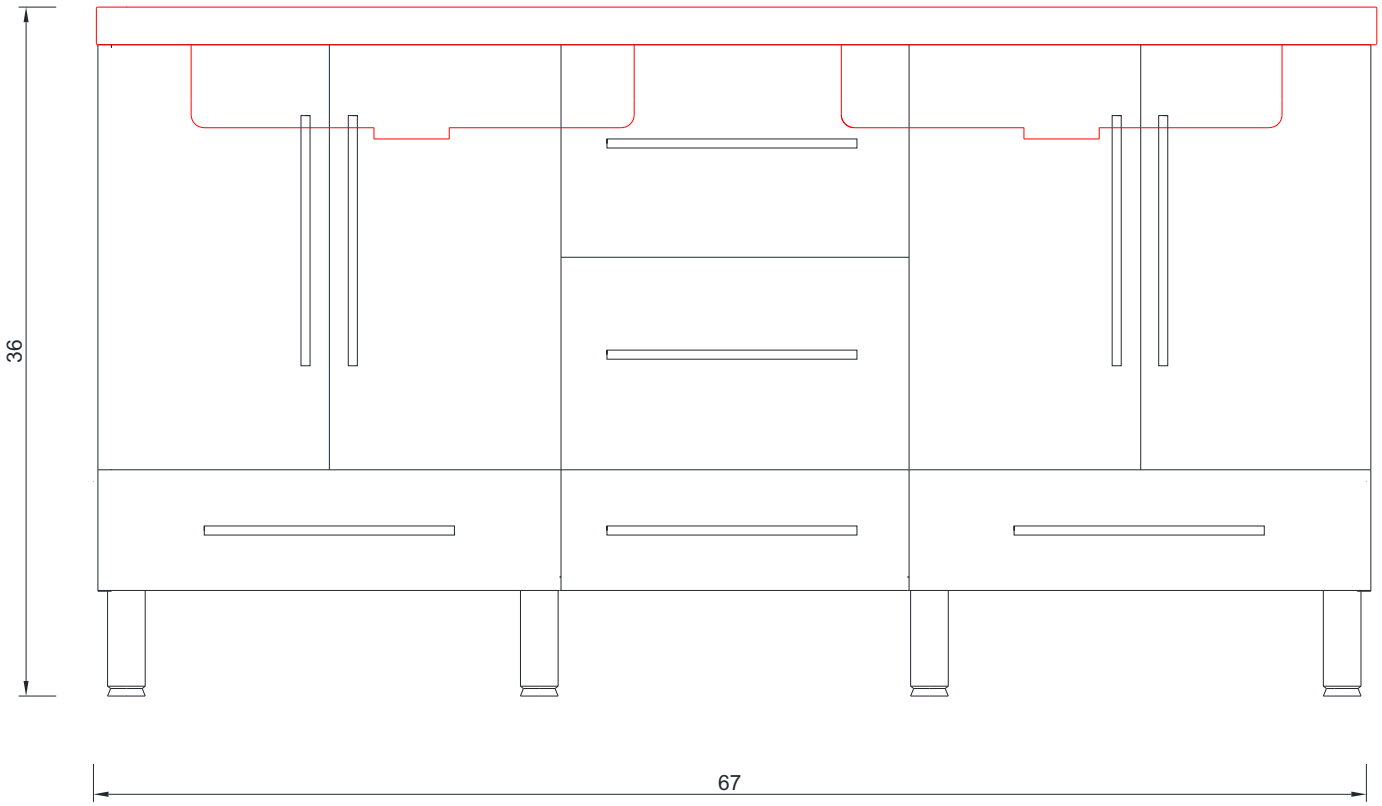

Vanity With Top

AT-8063

ALYA Bath

67"

RIPLEY COLLECTION

SIDE VIEW

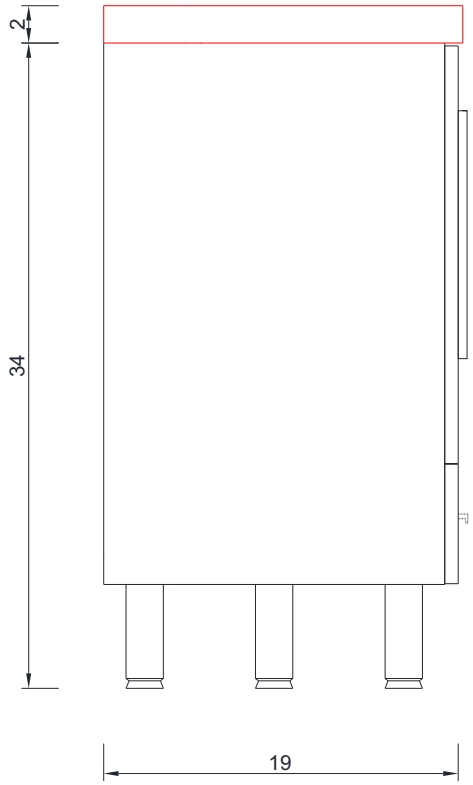

Vanity With Top

AT-8063

ALYA Bath

67"

RIPLEY COLLECTION

TOP VIEW

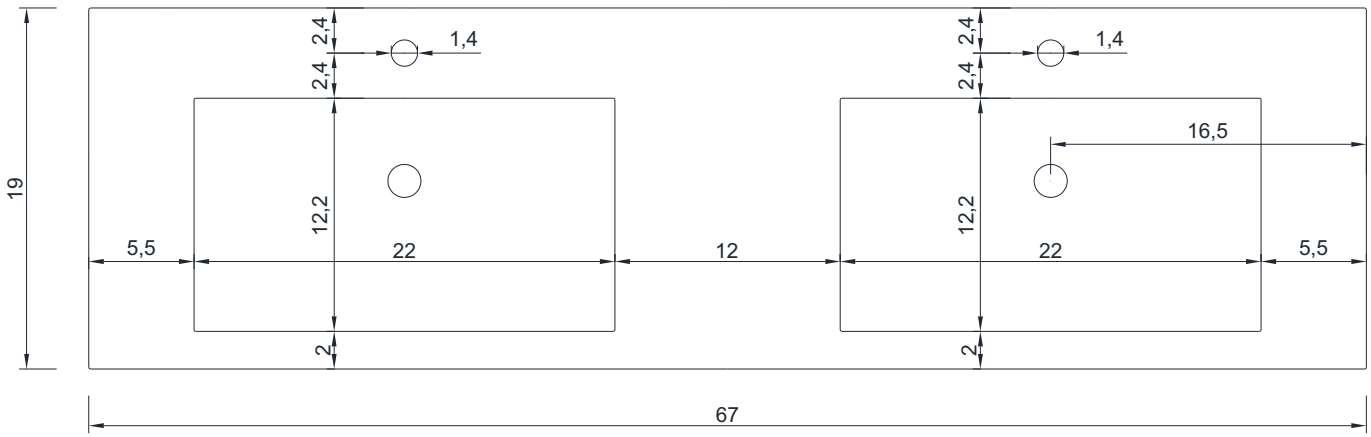

Vanity With Top

AT-8063

ALYA Bath